ALG-TECH

Faylon PCIE Image Data Acquisition Card

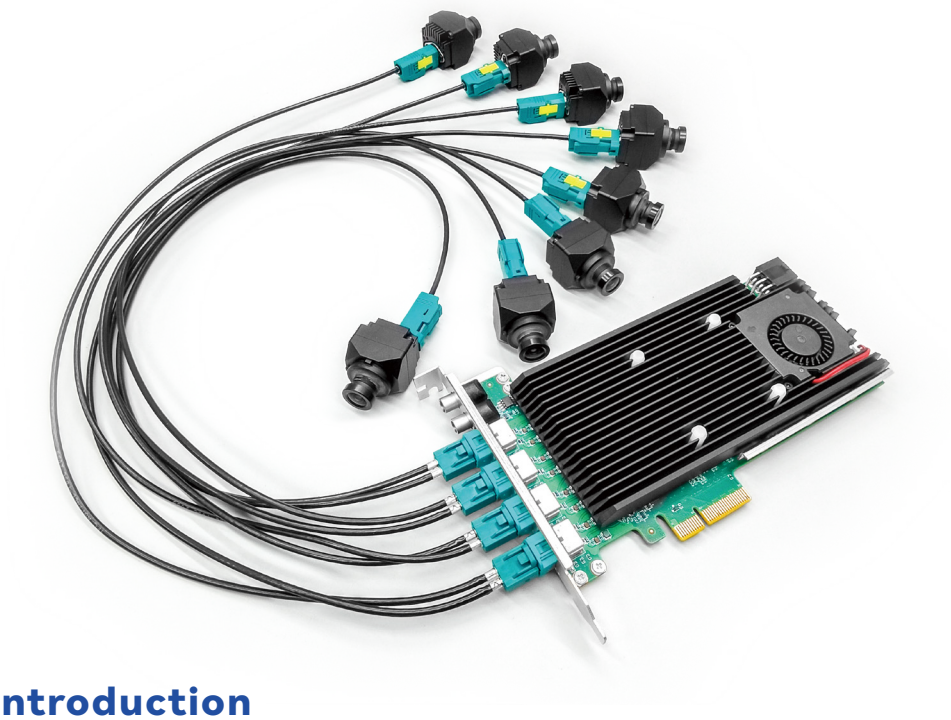

Product Introduction

Faylon PCIE image data acquisition card is designed to meet the real-time acquisition requirements of the auto drive system for GMSL camera signals. It supports simultaneous decoding of multi-channel GMSL1/2 protocol data, and is suitable for autopilot algorithm development, intelligent transportation, industrial automation and other scenarios. Based on high-performance FPGA chips, hardware level real-time parsing and parallel transmission of multiple high-speed differential signals are achieved, ensuring microsecond level time synchronization through hardware signal control. With the help of PCIE interface and DMA zero copy transmission technology, the original image data can be directly mapped to the host memory to ensure the real-time and accurate demand of the auto drive system for image data.

Product advantages

- Supports up to 8-channel GMSL camera signal acquisition; Compatible with MAXIM GMSL 1/2 serial port; Supports multiple image data formats: YUV/RAW/RGB;
- Microsecond level synchronous exposure trigger control; Support external trigger source input; Support PPS+GPRMC timing;
- DMA zero copy technology ensures real-time transmission of high bandwidth data; Support standard protocol frameworks such as V4L2/ROS; Provide a secondary development SDK that supports programming languages such as C++and Python;
- Adopting automotive/industrial grade chips, supporting a wide temperature working range; Reliable hardware design, suitable for use in car environments.

Application Instructions

◆ 8-16 channel GMSL acquisition

◆Single card supports up to 8 channels of GMSL acquisition, dual card cascading use, and can be expanded to up to 16 channels.
◆Each channel supports a maximum resolution of 8M (3840 * 2160)/30fps.

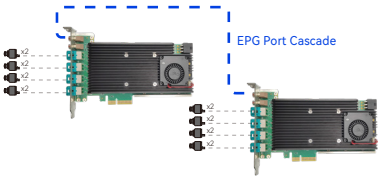

◆ External timing synchronization

◆Support external GPS timing *, with timing accuracy less than 20μs
◆Support external synchronization signal input * to control synchronized exposure of multiple cameras.

*Need to be paired with CS300GPS/time

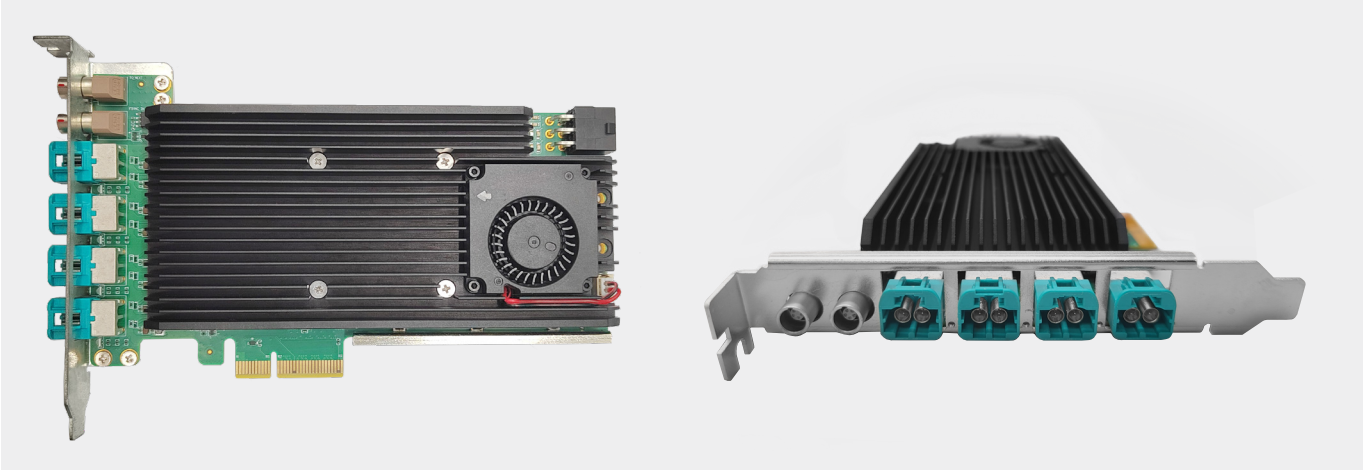

Product Parameters

Model	
AFL3843	
Bus	
Protocol Standard	Standard PCIE3.0
Channel	4-Channel
DMA	64-bit
Physical Bandwidth	3.9GB/s
Power Consumption	<25W
Camera Video Input	
Model Of Deserializer	MAX9296A
Pheasant Mouth	GMSL1/GMSL2
Connector	Coaxial Connector
POC Power Supply	MAX1A@9V
Number Of Supported Cameras	≤8
Input Resolution	Supports 1MP-8MP
Frame Rate	Depending On Camera Resolution And Quantity, up to 4 8MP/30fps or 8 2MP/30fps
Trigger	Support Simultaneous Triggering Of Cameras
	Support Camera Delay Triggering
	Support External Hard Trigger Signal Input
Universal Input/Output	
Input	1个TTL Input
Output	1个TTL Output
CAN	CAN1.0
Electrical Specifications	TTL Input Compatible With 5V And 3.3V
Software	
Host Operating System	Ubuntu 18.04/20.04/22.04/Windows 10/11
APIs	Provide SDK Interface
Usage Environment	
Operating Temperature	-20℃-65℃
Storage Temperature	-30℃-85℃
Operating Humidity	10%-90%
Storage Humidity	10%-90%
Mechanical Structure	
Installation Method	Standard PCIe 3.0 x 4 slot, PCIe 3.0 Standard Board Design
Cooling Method	Shell Metal Plate+Air-Cooled
Connector	Camera Input: Rosenberg L02-CA4322-XXX-Y-YY Coaxial 2-in-1
	External Trigger Input T1: EPG Connector
	TTL Output T2: EPG Connector
Size	165mmx96mm x18.1mm
Weight	282g

Interface Definition

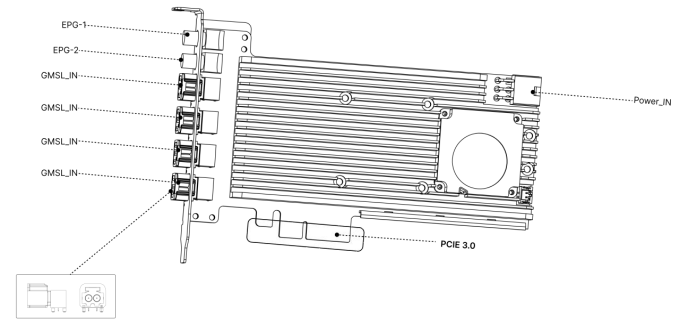

The GMSL interface uses a Fakra combo connector

Structural Dimensions

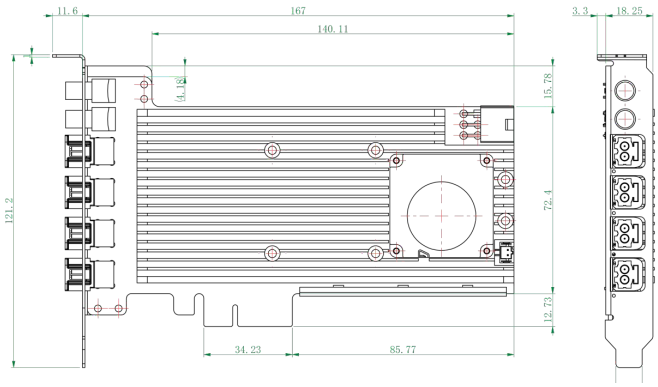

Shenzhen Aili-Light Technology Co., Ltd

Tel: 0755-27218150
Business: sales@alg-tech.com
Web: WWW.ALG-TECH.COM
Add: Zone 82, Halyu Community, Xin'an Street, Bao an District, Shenzhen City

| WeChat |

| TaoBao |