ALG-TECH

AVS-Z Series Car Stereo Camera

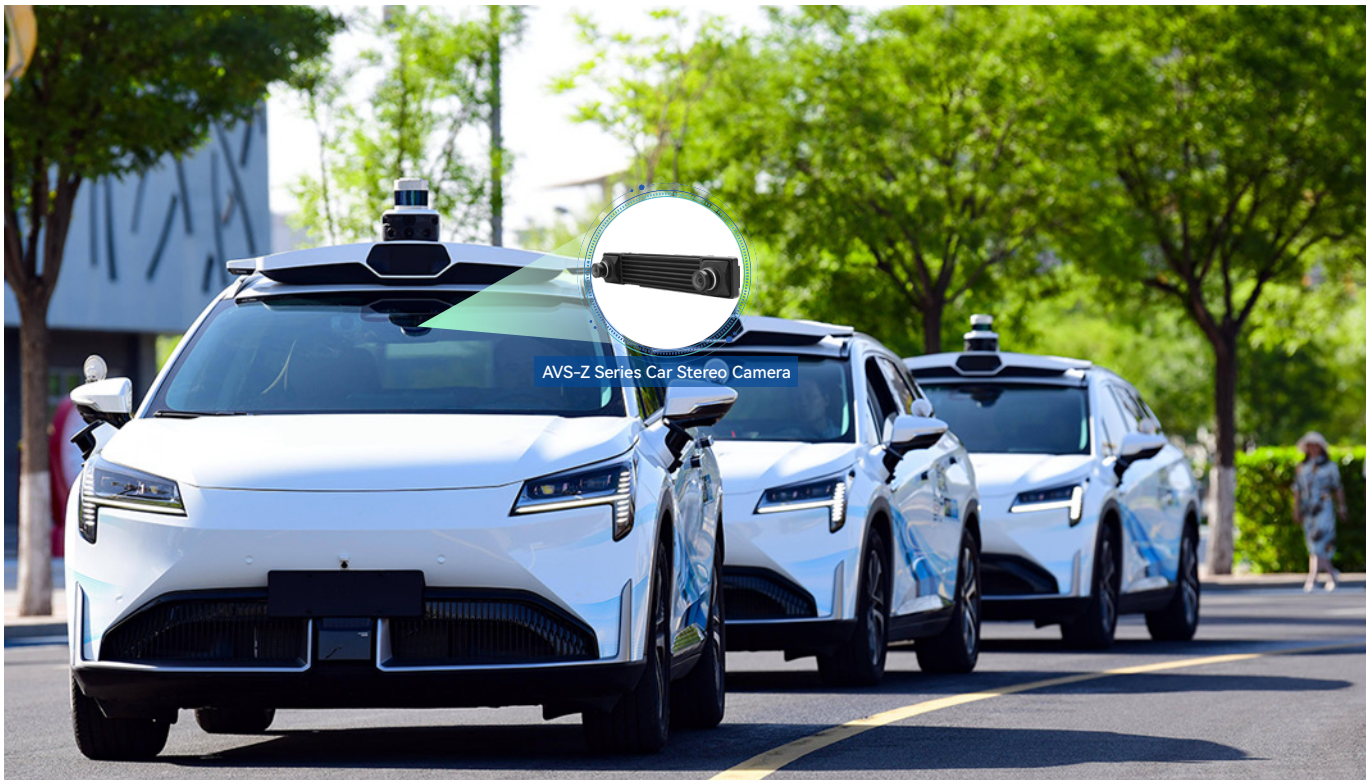

Product Introduction

ALG-TECH'S "AVS" series of binocular cameras are designed to provide high-precision stereoscopic perception capabilities for scenes such as robotics, autonomous driving, and industrial automation. They have high synchronization to ensure synchronized exposure of left and right cameras, and provide mainstream interfaces such as GMSL2 and MIPI as well as multiple specifications and models to flexibly adapt to various scene needs.

Product advantages

High Performance Imaging

Equipped with high-performance image sensors, supporting high-resolution and high frame rate output; Some models use automotive grade CMOS with a dynamic range of>120dB, suitable for complex lighting environments such as strong and low light.

Stereo Vision

By combining ultra wide angle field of view and adaptive exposure control technology, real-time depth maps can be output, supporting integrated applications such as environmental perception, 3D modeling, and SLAM/VIO.

High Synchronization

Supports external triggering and synchronized exposure with multiple cameras, with a synchronization accuracy of<1ms, meeting the needs of multi camera collaboration and high dynamic scenes.

Sturdy Structure

Industrial grade sturdy design, with a working temperature range covering -40 ° C to+85 ° C, and some models have IP67 protection level, suitable for outdoor and harsh working conditions.

Convenient Integration

Provide a complete SDK, supporting standard frameworks such as V4L2 and ROS, compatible with X86 and ARM platforms (such as Jetson, Raspberry Pi, etc.), greatly reducing the difficulty of secondary development.

Product Parameters

AVS-Z Series Product Specifications			
Product Model	AVS-212A-B12-M17G-G52-RABA	AVS-213C-B16-M17G-Z00-RABA	AVS-218C-B20-M17G-OX4-
Resolution	1920 x 1280	1920x 1536	3840 x2160
HFOV	100°(Horizontal)	120°(Horizontal)	120°(Horizontal)
EFL	3.47mm	3.0mm	3.69mm
Frame Rate	30 fps	30 fps	30 fps
Depth Measurement			
Baseline	120 mm	160mm	200 mm
Depth Measurement	0.5m-20m(Ideal Value)	0.5m-35m(Ideal Value)	0.5m-80m(Ideal Value)
Exposure Control	Built-in ISP Control	Built-in ISP Control	Built-in ISP Control
Image Sensor			
Optical Size	1/2.6" CMOS	1/2.4" CMOS	1/1.7" CMOS
Pixel Size	3.0um	3.0um	2.1um
Dynamic Range	>120dB	>120dB	>120dB
Shutter Type	Rolling Shutter	Rolling Shutter	Rolling Shutter
Connection And Power Supply			
Transmission Protocol	GMSL 2	GMSL 2	GMSL 2
Camera Interface	Fakra Z	Fakra Z	Fakra Z
Power Supply Method	POC (via GMSL)	POC (via GMSL)	POC (via GMSL)
Secondary Development Kit			
Interface	V4L2/ROS	V4L2/ROS	V4L2/ROS
System	Linux (Ubuntu)	Linux (Ubuntu)	Linux (Ubuntu)
Architecture	X86/ARM	X86/ARM	X86/ARM
Reliability And Protection			
Operation Temperature	-40°C~ +85°C	-40°C~ +85°C	-40°C~ +85°C
Waterproof	IP67	IP67	IP67

Structural Dimensions

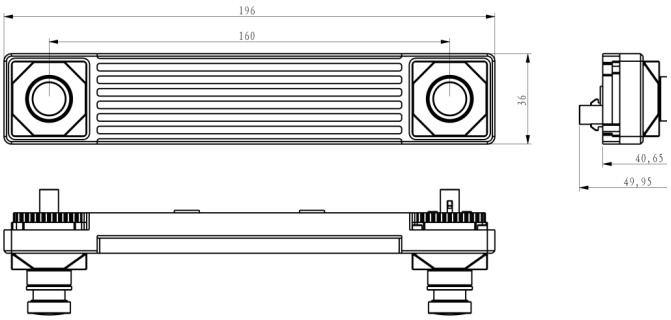

Interface Definition

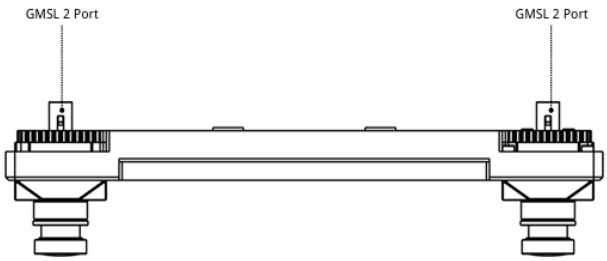

Shenzhen Aili-Light Technology Co., Ltd

Tel: 0755-27218150
Business: sales@alg-tech.com
Web: WWW.ALG-TECH.COM
Add: Zone 82, Haiyu Community, Xin'an Street, Bao'an District, Shenzhen City

| WeChat |

| TaoBao |