ALG-TECH

AUL Series USB Camera

Product Introduction

ALG-TECH'S "AUL" series of industrial vision USB cameras is a high-performance industrial camera module designed for unmanned vehicles, object recognition, and intelligent perception systems. It supports USB 3.0/USB 2.0 transmission standards, has high bandwidth and excellent compatibility, provides multiple resolution and frame rate options, and flexibly adapts to various scene needs.

Product advantages

High speed and low latency transmission

USB 3.0 module provides high bandwidth to ensure real-time transmission of high-resolution images; USB 2.0 module meets the smooth capture requirements of dynamic scenes through high frame rate and efficient encoding.

Excellent image quality

ISP image processor, supporting automatic exposure, white balance, and noise reduction; Provide YUV422 uncompressed and MJPEG compressed dual output modes, ensuring complete image quality while also considering transmission efficiency.

Wide dynamic range

The entire series has a wide dynamic range (USB 3.0 ≥ 120dB, USB 2.0 z80dB), which can output images with rich layers and clear details in backlit, strong light, and low light environments.

High compatibility

Adopting the UVC universal video standard, supporting Windows and Linux operating systems, plug and play can be achieved without additional drivers, making it easy to integrate and deploy quickly.

Industrial grade reliability

Adopting a full glass lens with high transmittance and minimal distortion; Capable of working in a wide temperature range, meeting the stringent requirements for equipment durability and stability in industrial and outdoor scenarios.

Product Parameters

Product Code: AUL031-Y 3M USB Camera
Resolution: 1920 (H) x 1536 (V)
Field Of View: 118.54° /200°
Focal Length: 3.02mm/1.33mm
Frame Rate: 30 FPS
F-NO: 2.0
Optical Size: 1/2.4 inch CMOS
Pixel Size: 3.0um
Shutter Mode: Rolling Shutter
Dynamic Range: 120dB
Operation Temperature: -40°C~ +85°C
Protection: IP67

Product Code: AUL268-S 2M USB Camera
Resolution: 1920 (H) x 1080 (V)
Field Of View: 112.6° /122°/150.2°
Focal Length: 3.35mm/2.74mm/2.28mm
Frame Rate: 30 FPS
F-NO: 2.0/1.7/2.2
Optical Size: 1/2.7 inch CMOS
Pixel Size: 3.0um
Shutter Mode: Rolling Shutter
Dynamic Range: 85dB
Operation Temperature: -40°C~ +85°C
Protection: IP67

Structural Dimensions

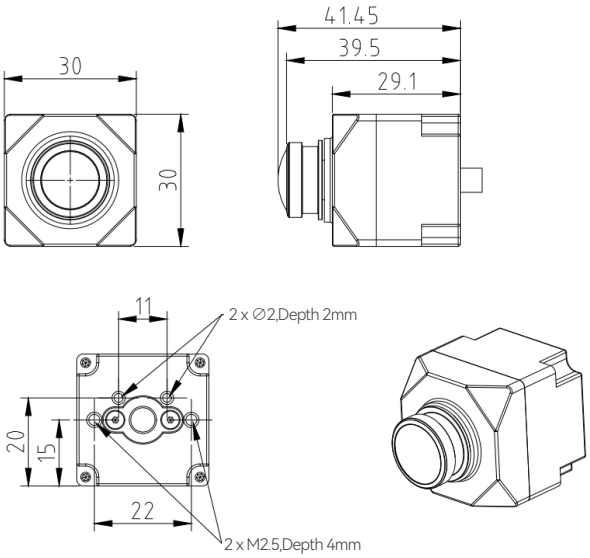

Using AUL1320-S031H54S00-U3AAI-IP67as an example.

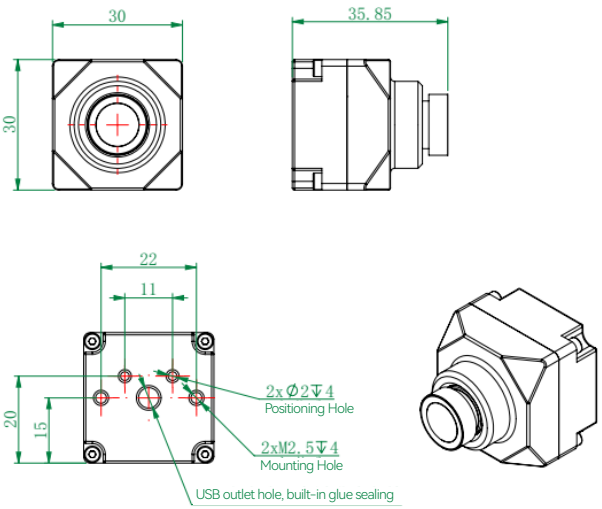

Using AUL1211-P268-TA6-XR3-U2MPS-IP67as an example.

Shenzhen Aili-Light Technology Co., Ltd

Tel: 0755-27218150
Business: sales@alg-tech.com
Web: WWW.ALG-TECH.COM
Add: Zone 82, Haiyu Community, Xin'an Street, Bao'an District, Shenzhen City

| WeChat |

| TaoBao |