ALG-TECH

ALI Series GMSL Cameras For Mobile Robots

Product Introduction

ALG-TECH'S "ALI" series GMSL cameras are specially designed for autonomous driving, low-speed unmanned vehicles, and intelligent robots. Based on high-performance sensors, they provide a variety of specifications to flexibly adapt to various scene requirements; The built-in ISP chip integrates real-time noise reduction, color calibration and other image processing technologies, combined with high reliability design and GMSL transmission architecture, to provide stable and high-quality visual solutions for intelligent perception systems.

Product Advantages

High resolution imaging
Supports a resolution of 2MP (1920HX1200V) to meet the precision perception requirements of mobile robots.

CMOS low light enhancement
Adopting back illuminated CMOS technology, it automatically reduces signal-to-noise ratio in nighttime and low light environments, ensuring image clarity.

Over 120dB high dynamic range
Based on multiple exposure fusion and nonlinear compression algorithm, it supports high dynamic range of ≥ 120dB, ensuring lossless details and true color image output in complex lighting conditions with interweaving brightness and darkness.

Multi sensor fusion perception
Supports external triggering and can be combined with sensors such as LIDAR and millimeter wave radar to provide multimodal data fusion.

Wide temperature range operation
Through thermal stress compensation structure and metal substrate design, it supports stable operation in a wide temperature range of -40 ° C to 85 ° C and adapts to extreme weather environments.

LED anti flicker function
Adopting global shutter and adaptive exposure control, supporting LFM function, eliminating LED light source flicker interference, and ensuring visual data stability.

Product Parameters

Product Code: ALI145-X 1M
Resolution: 1280 (H) x 800 (V)
Field Of View: 76° / 120°
Focal Length: 2.8mm/1.67mm
Frame Rate : 30 FPS
F-NO: 2.0
Serializer: MAX96717G
Optical Size: 1/4.3 inch CMOS
Pixel Size: 2.8um
Shutter Mode: Global Shutter
Transmission Protocol: GMSL2
Operation Temperature: -20°C~+65°C
Protection: IP67

Product Code: ALI234-X 2M
Resolution: 1920 (H) x 1200 (V)
Field Of View: 60°
Focal Length: 5.83mm
Frame Rate : 30/60 FPS
F-NO: 1.5
Serializer: MAX96717G
Optical Size: 1/2.6 inch CMOS
Pixel Size: 3.0um
Shutter Mode: Global Shutter
Transmission Protocol: GMSL2
Operation Temperature: -40°C~+85°C
Protection: IP67

Structural Dimensions

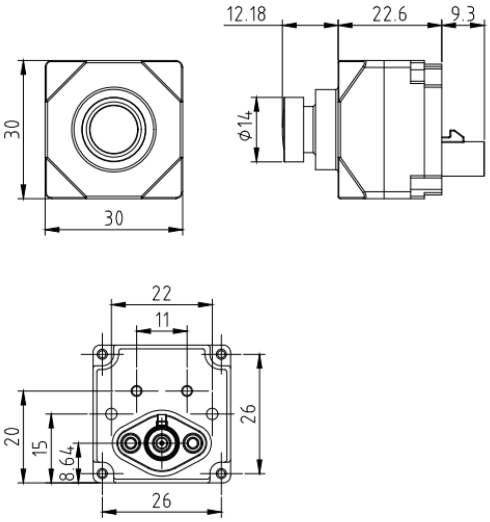

Using ALI3107-N145M17G52-YC8MBI-IP67as an example

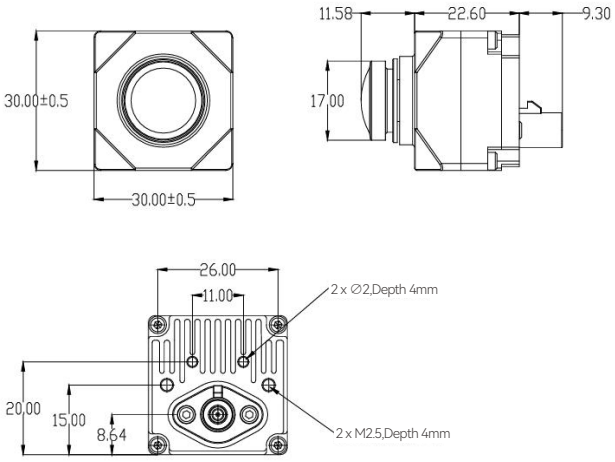

Using ALI3206-N234M17FA1-T62MBI-IP67as an example

Shenzhen Aili-Light Technology Co., Ltd

Tel: 0755-27218150
Business: sales@alg-tech.com
Web: WWW.ALG-TECH.COM
Add: Zone 82, Haiyu Community, Xin'an Street, Bao'an District, Shenzhen City

| WeChat |

| TaoBao |