ALI Series GMSL Cameras For Automotive

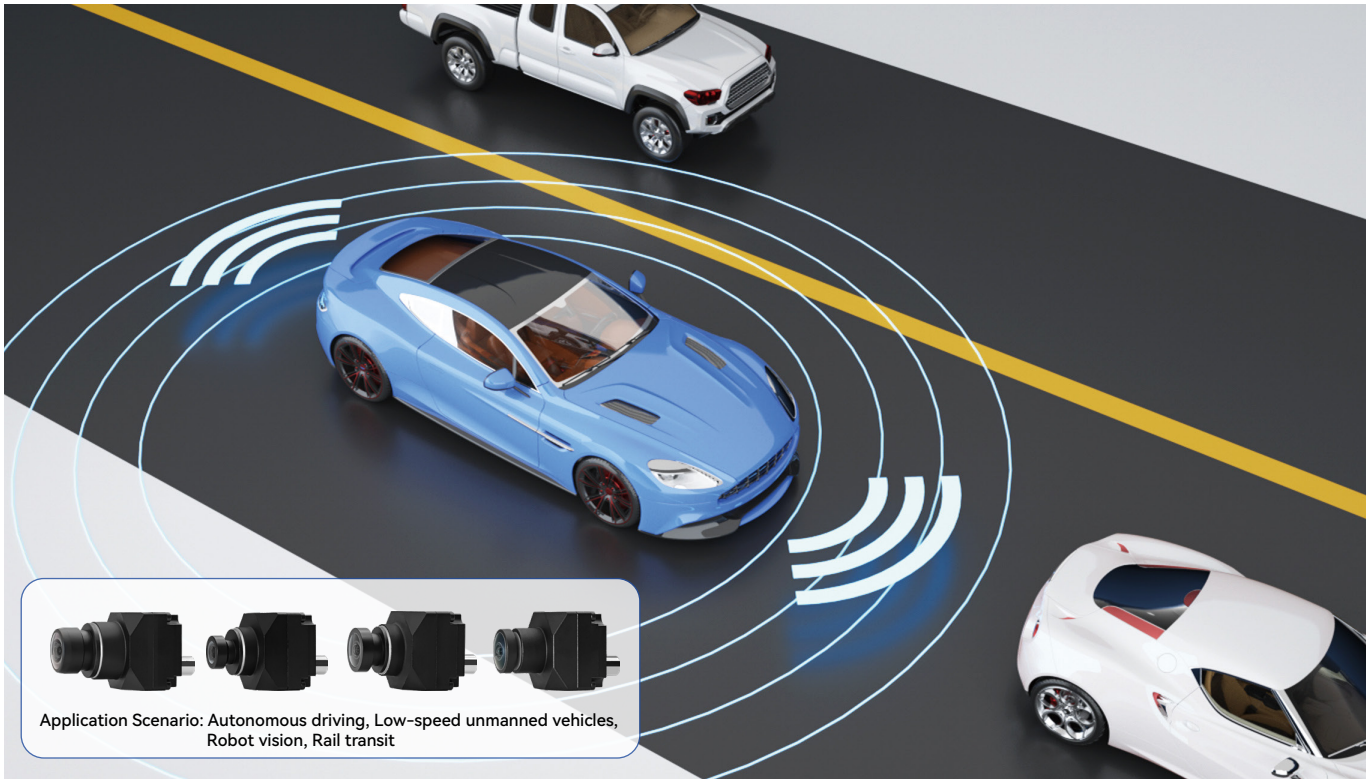

Product Introduction

ALG-TECH'S "ALI" series GMSL cameras are specially designed for autonomous driving, low-speed unmanned vehicles, and intelligent robots. Based on high-performance sensors, they provide a variety of specifications to flexibly adapt to various scene requirements; The built-in ISP chip integrates real-time noise reduction, color calibration and other image processing technologies, combined with high reliability design and GMSL transmission architecture, to provide stable and high-quality visual solutions for intelligent perception systems.

The camera is fully compatible with platforms such as NVIDIA, D-Robots RDKX5, S100, Rockchip RK3588, Jetson AGX Orin, Jetson AGX Thor, Raspberry Pi 5, etc.

Product Advantages

High resolution imaging
Supports resolutions of up to 8 and 3MP, meeting the high-precision perception requirements of L4 level autonomous driving.

CMOS low light enhancement
Adopting back illuminated CMOS technology, it automatically reduces signal-to-noise ratio in nighttime and low light environments, ensuring image clarity.

Over 120dB high dynamic range
Based on multiple exposure fusion and nonlinear compression algorithm, it supports high dynamic range of ≥ 120dB, ensuring lossless details and true color image output in complex lighting conditions with interweaving brightness and darkness.

Multi sensor fusion perception
Supports external triggering and can be combined with sensors such as LIDAR and millimeter wave radar to provide multimodal data fusion.

Wide temperature range operation
Through thermal stress compensation structure and metal substrate design, it supports stable operation in a wide temperature range of -40 ° C to 85 ° C and adapts to extreme weather environments.

LED anti flicker function
Adopting global shutter and adaptive exposure control, supporting LFM function, eliminating LED light source flicker interference, and ensuring visual data stability.

Product Parameters

Product Code: ALIX8B-Z 8M

Resolution: 3840 (H) x 2160 (V)

Field Of View: 30° / 123.2°

Focal Length: 15.39mm/3.69mm

Frame Rate: 30 FPS

F-NO: 1.6

Dynamic Range: 120dB

Optical Size: 1/1.7 inch CMOS

Pixel Size: 2.1um

Shutter Mode: Rolling Shutter

Transmission Protocol: GMSL2

Operation Temperature: -40°C~ +85°C

Protection: IP67

Product Code: ALIX3C-Z 2M

Resolution: 1920 (H) x 1080 (V)

Field Of View: 63.7° / 118.54° / 201.4°

Focal Length: 5.32mm/3.02mm/1.33mm

Frame Rate: 30 FPS

F-NO: 1.7/1.8/2.0

Dynamic Range: 120dB

Optical Size: 1/2.6 inch CMOS

Pixel Size: 3.0um

Shutter Mode: Rolling Shutter

Transmission Protocol: GMSL2

Operation Temperature: -40°C~ +85°C

Protection: IP67

Structural Dimensions

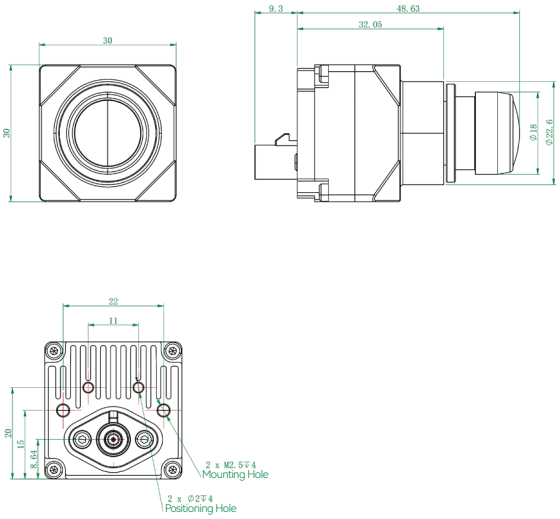

Using ALI2812-OCH-SABA-IP67as an example.

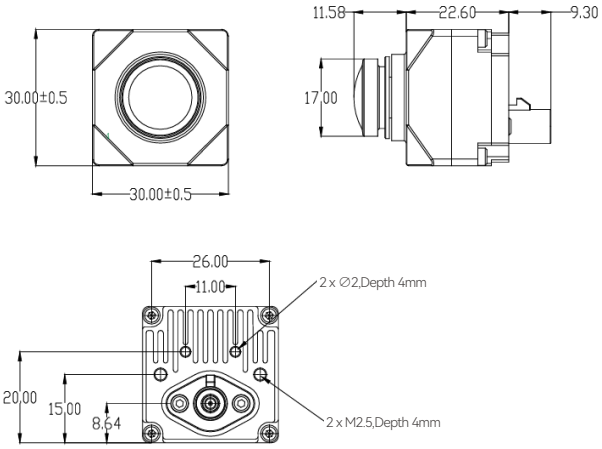

Using ALI3220-OX3CM17GG52-X82ABA-IP67as an example.

Shenzhen Aili-Light Technology Co., Ltd

Tel: 0755-27218150
Business: sales@alg-tech.com
Web: WWW.ALG-TECH.COM
Add: Zone 82, Haiyu Community, Xin'an Street, Bao'an District, Shenzhen City

| WeChat |

| TaoBao |

Product Parameters

Product Code: ALI031-ZH 3M

Resolution: 1920 (H) x 1536(V)

Field Of View: 63.9° / 100° / 118.54° / 197°

Focal Length: 5.3mm/3.47mm/3.02mm/1.45mm

Frame Rate: 30 FPS

F-NO: 2.0/1.8

Dynamic Range: 120dB

Optical Size: 1/2.4 inch CMOS

Pixel Size: 3.0um

Shutter Mode: Rolling Shutter

Transmission Protocol: GMSL2

Operation Temperature: -40°C~ +85°C

Protection: IP67

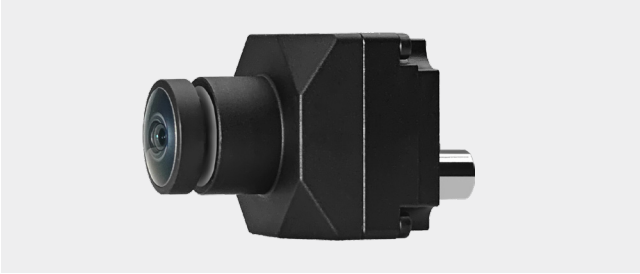

Product Code: ALI360-ZH 3M

Resolution: 1920 (H) x 1536 (V)

Field Of View: 60° / 106.2° / 120° / 200°

Focal Length: 5.82mm/3.13mm/3.02mm/1.42mm

Frame Rate: 30 FPS

F-NO: 1.4/1.5/1.6

Dynamic Range: 120dB

Optical Size: 1/2.44 inch CMOS

Pixel Size: 3.0um

Shutter Mode: Rolling Shutter

Transmission Protocol: GMSL2

Operation Temperature: -40°C~ +85°C

Protection: IP67

Structural Dimensions

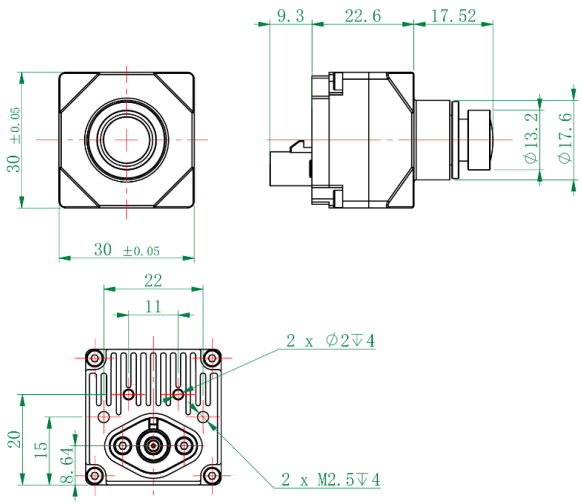

Using ALI2206-SCH-SABA-IP67as an example.

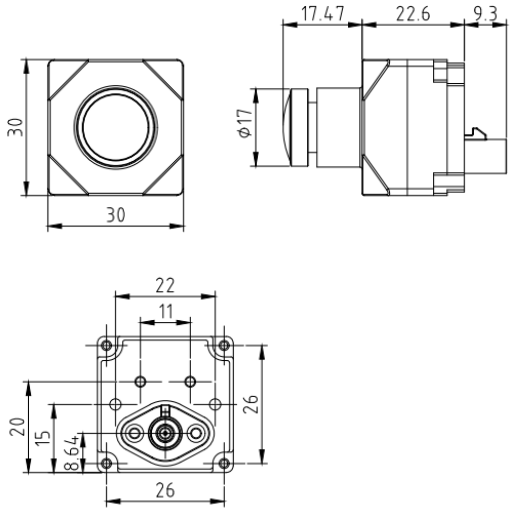

Using ALI3312-C360M17GZ00-T26MBI-IP67as an example.

Shenzhen Aili-Light Technology Co., Ltd

Tel: 0755-27218150
Business: sales@alg-tech.com
Web: WWW.ALG-TECH.COM
Add: Zone 82, Haiyu Community, Xin'an Street, Bao'an District, Shenzhen City

| WeChat |

| TaoBao |