ALG-TECH

AVS-Y Series Stereo Camera

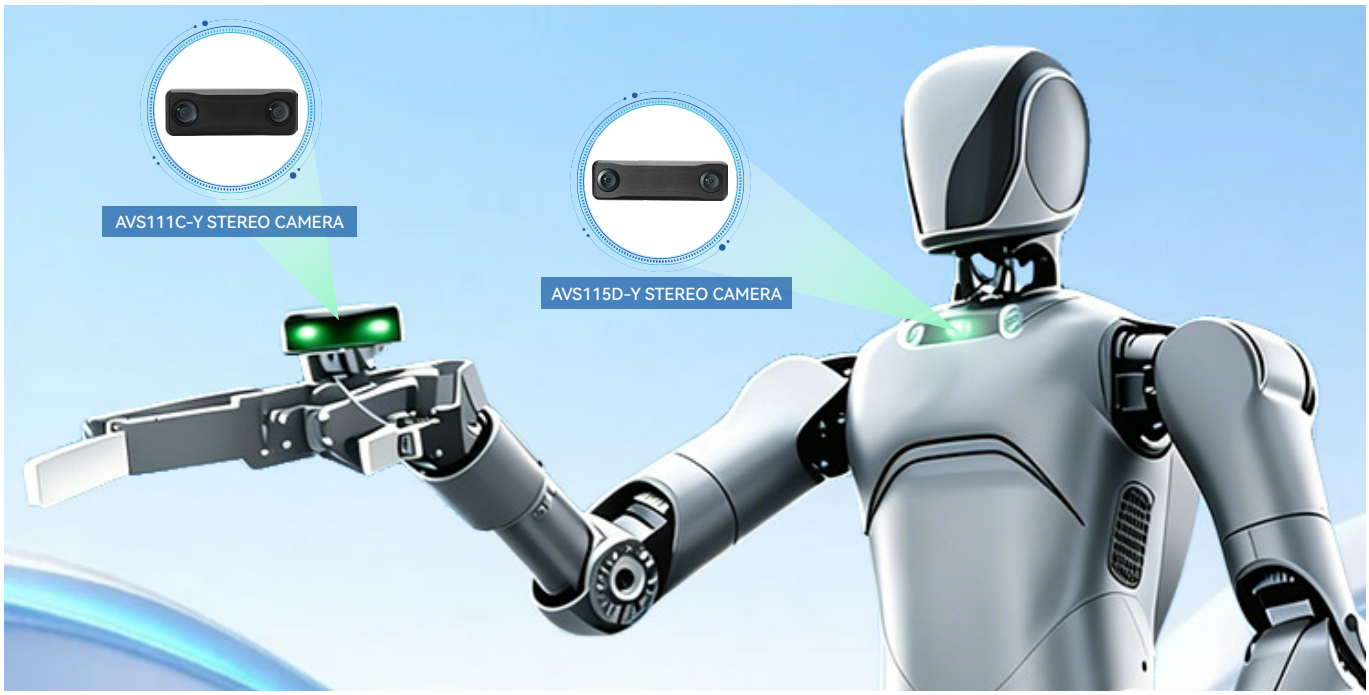

Product Introduction

ALG-TECH'S "AVS" series of binocular cameras are designed to provide high-precision stereoscopic perception capabilities for scenes such as robotics, autonomous driving, and industrial automation. They have high synchronization to ensure synchronized exposure of left and right cameras, and provide mainstream interfaces such as GMSL2 and MIPI as well as multiple specifications and models to flexibly adapt to various scene needs.
The camera is fully compatible with platforms such as NVIDIA Jetson, D-Robotics RDKX5、S100, Rockchip RK3588, Jetson AGX Orin, Jetson AGX Thor, Raspberry Pi 5, etc.

Product advantages

High Performance Imaging
Equipped with high-performance image sensors, supporting high-resolution and high frame rate output; Some models use automotive grade CMOS with a dynamic range of>120dB, suitable for complex lighting environments such as strong and low light.

Stereo Vision
By combining ultra wide angle field of view and adaptive exposure control technology, real-time depth maps can be output, supporting integrated applications such as environmental perception, 3D modeling, and SLAM/VIO.

High Synchronization
Supports external triggering and synchronized exposure with multiple cameras, with a synchronization accuracy of<1ms, meeting the needs of multi camera collaboration and high dynamic scenes.

Sturdy Structure
Industrial grade sturdy design, with a working temperature range covering -20 ° C to+65 ° C, and some models have IP67 protection level, suitable for outdoor and harsh working conditions.

Inertial Sensing
Integrated 6-axis IMU (accelerometer+gyroscope), supporting visual inertial odometry: built-in ISP, providing distortion correction, stereo matching, and image enhancement.

Convenient Integration
Provide a complete SDK, supporting standard frameworks such as V4L2 and ROS, compatible with X86 and ARM platforms (such as Jetson, Raspberry Pi, etc.), greatly reducing the difficulty of secondary development.

AVS111C-Y 1M Product Parameters

Product Specifications			
Product Model	AVS111C-B05-M17G-G52-GABI	AVS111C-B05-M17G-I00-G52-GABI	AVS111C-B05-M17G-C00-G52-GABI
Resolution	1280(H)x800(V)		
Field Of View	120°x76°		
EFL	1.67mm		
Frame Rate	30/60 fps		
Image Format	UYVY (YUV422)		
Focus Distance	0.4m		
Working Distance	0.05m~2m		
Depth Measurement			
Baseline	50mm		
Depth Measurement Range	0.1m-2m(Ideal Value)		
Exposure Control	Internal/external trigger, default external trigger		
Image Sensor			
Optical Size	1/4.3" CMOS		
Pixel Size	2.8um		
Shutter Type	Global Shutter		
Connection And Power Supply			
Transmission Protocol	GMSL 2		
Output Interface	Fakra Z（Interface Model：SMBF-FKMX3-3GT30G-50）		
Expansion Interface		IIC（Model：WAFER-GH1.25-4PLB）	CAN（Model：WAFER-GH1.25-4PLB）
Power Supply Method	POC (via GMSL)		
Secondary Development Kit			
Interface	V4L2/ROS		
System	Linux (Ubuntu)		
Architecture	X86/ARM		
Reliability			
Operation Temperature	-20°C~ +65°C		

Interface Definition

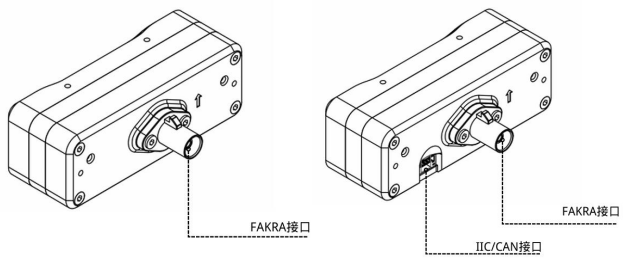

Structural Dimensions

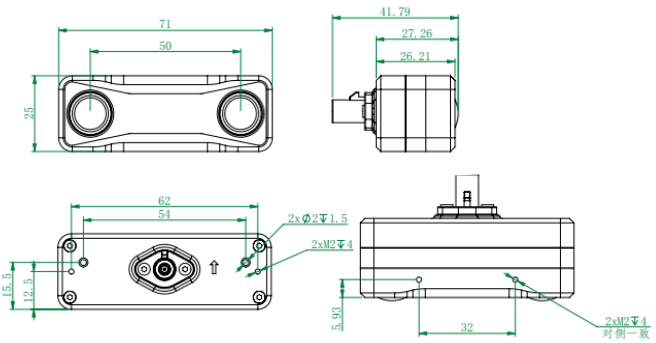

AVS111D-Y 5M Product Parameters

Product Specifications			
Product Model	AVS115D-B06-M95D-FA1-RABI	AVS115D-B06-M17G-G00-FA1-RABI	KZ-AVS115D-B06-M17G-G00-FA1-RABI
Resolution	1920(H)x1920(V)		2560(H)x1920(V)
HFOV	119°		165°
VFOV	119°		
EFL	1.90mm		
Frame Rate	30 fps	60 fps	45 fps
Focus Distance	0.8m		
Working Distance	0.3m-∞		
Depth Measurement			
Baseline	65mm		
Depth Measurement Range	0.35m-10m（Ideal Value）		
Exposure Control	External trigger		
Image Sensor			
Optical Size	1/2.7'' CMOS		
Pixel Size	2.0um		
Dynamic Range	82dB		
Shutter Type	Rolling Shutter		
Connection And Power Supply			
Transmission Protocol	GMSL 2		
Camera interface	Fakra Z（Model：SMBF-FKMX3-3GT30G-50）	Fakra Z x 2（Model：SMBF-FKMX3-3GT30G-50）	Fakra Z x 2（Model：SMBF-FKMX3-3GT30G-50）
Power Supply Method	POC (via GMSL)		
Secondary Development Kit			
Interface	V4L2/ROS		
System	Linux (Ubuntu)		
Architecture	X86/ARM		
Reliability			
Operation Temperature	-20℃~ +65℃		

Structural Dimensions

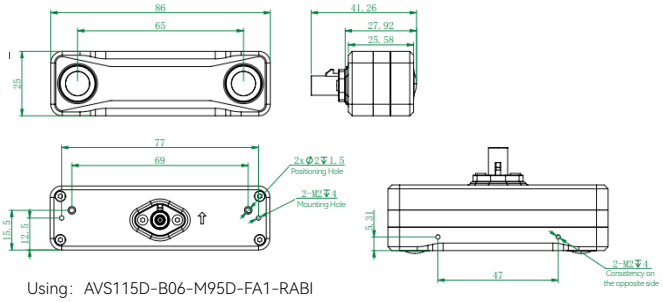

Using：AVS115D-B06-M95D-FA1-RABI

Interface Definition

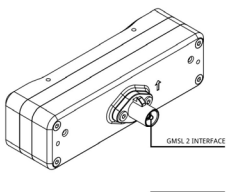

Using：AVS115D-B06-M95D-FA1-RABI

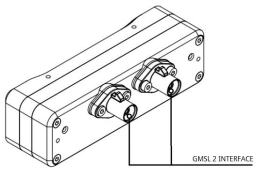

Using：AVS115D-B06-M17G-G00-FA1-RABI

Shenzhen Aili-Light Technology Co., Ltd

Tel：0755-27218150
Business：sales@alg-tech.com
Web：WWW.ALG-TECH.COM
Add：Zone 82, Halyu Community, Xin'an Street, Bao an District, Shenzhen City

| WeChat |

| TaoBao |