ALG-TECH

AVS115D-Y 5M Stereo Camera

Product Introduction

ALG-TECH'S "AVS" series of binocular cameras are designed to provide high-precision stereoscopic perception capabilities for scenes such as robotics, autonomous driving, and industrial automation. They have high synchronization to ensure synchronized exposure of left and right cameras, and provide mainstream interfaces such as GMSL2 and MIPI as well as multiple specifications and models to flexibly adapt to various scene needs.
The camera is fully compatible with platforms such as NVIDIA Jetson, D-Robotics RDKX5、S100, Rockchip RK3588, Jetson AGX Orin, Jetson AGX Thor, Raspberry Pi 5, etc.

Product advantages

- **5MP high-definition pixels:** 5M high-performance image sensor, acchieve long-distance observation and richer detailed observation.
- **up to 60fps high frame rate output:** Address the pain points of ordinary cameras, such as head-turning smearing, positioning lag, and sluggish response.
- **Built-in ISP image processing:** Outputs YUV image format, optimize the screen brightness and contrast.
- **Microsecond-level binocular synchronous output:** The camera images are triggered and captured synchronously, eliminating the imaging time difference.
- **Wide dynamic range:** Solve problems such as low light conditions and overexposure to strong light for cameras.
- **165° HFOV:** 2560x1920 high-resolution display, With a 5:4 aspect ratio, it can cover a wider range of scenes.
- **Built in IMU:** Real time capture of dynamic data such as horizontal shaking and angle deviation of the device, realizing the linkage output of visual images and posture data.
- **POC integrated power supply:** Power supply and signal transmission share the same channel, without the need to reserve an independent power supply interface
- **Industrial grade protection:** Can solve various complex and harsh working conditions in industry.
- **Full platform compatibility:** Plug and play, simple adaptation, significantly shorten the customer project development, product iteration, and solution implementation cycle.
- **Active Alignment:** Effectively reduce issues such as image distortion, virtual focus, and offset
- **Optical non spherical glass lens:** Improve lens transmittance, reduce light loss and imaging distortion.

Product Parameters

Product Specifications			
Product Model	AVS115D-B06-M95D-FA1-RABI	AVS115D-B06-M17G-G00-FA1-RABI	KZ-AVS115D-B06-M17G-G00-FA1-RABI
Resolution	1920(H)x1920(V)		2560(H)x1920(V)
HFOV	119°		165°
VFOV	119°		
EFL	1.90mm		
Frame Rate	30 fps	60 fps	45 fps
Focus Distance	0.8m		
Working Distance	0.3m-∞		
Depth Measurement			
Baseline	65mm		
Depth Measurement Range	0.35m-10m（Ideal Value）		
Exposure Control	External trigger		
Image Sensor			
Optical Size	1/2.7'' CMOS		
Pixel Size	2.0um		
Dynamic Range	82dB		
Shutter Type	Rolling Shutter		
Connection And Power Supply			
Transmission Protocol	GMSL 2		
Camera interface	Fakra Z（Model：SMBF-FKMX3-3GT30G-50）	Fakra Z x 2（Model：SMBF-FKMX3-3GT30G-50）	Fakra Z x 2（Model：SMBF-FKMX3-3GT30G-50）
Power Supply Method	POC (via GMSL)		
Secondary Development Kit			
Interface	V4L2/ROS		
System	Linux (Ubuntu)		
Architecture	X86/ARM		
Reliability			
Operation Temperature	-20℃~ +65℃		

Structural Dimensions

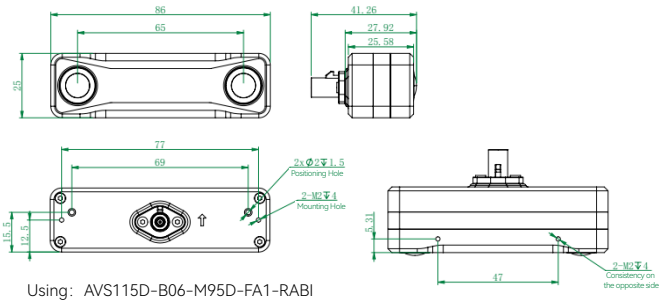

Using：AVS115D-B06-M95D-FA1-RABI

Interface Definition

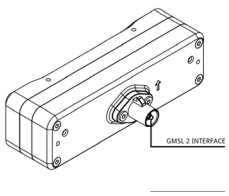

Using：AVS115D-B06-M95D-FA1-RABI

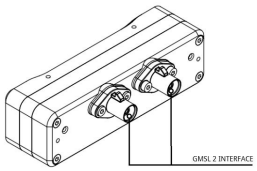

Using：AVS115D-B06-M17G-G00-FA1-RABI

Shenzhen Aili-Light Technology Co., Ltd

Tel：0755-27218150
Business：sales@alg-tech.com
Web：WWW.ALG-TECH.COM
Add：Zone 82, Halyu Community, Xin'an Street, Bao an District, Shenzhen City

| WeChat |

| TaoBao |